DF005 thru DF10

1.0 A Single-Phase Glass Passivated Bridge Rectifiers

Rectifier Reverse Voltage 50 to 1000V

DF

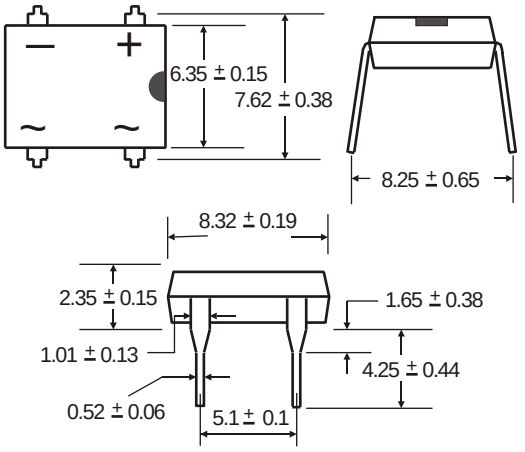

Dimensions in millimeters (1mm =0.0394")

Features

- This series is UL listed under the Recognized Component Index, file number E142814
- The plastic material used carries Underwriters Laboratory flammability recognition 94V-0
- Surge overload ratings to 50 amperes
- Ideal for printed circuit board application
- High temperature soldering guaranteed 265 °C /10 seconds at 5 lbs (2.3kg) tension

Mechanical Data

Case: Molded plastic
Terminals: Plated leads solderable per MIL-STD-202, Method 208
Polarity: Marked on body
Mounting Position: Any
Weight: 0.04 ounce, 1.0 grams (approx)

Maximum Ratings & Thermal Characteristics

Rating at 25°C ambient temperature unless otherwise specified, Resistive or Inductive load, 60 Hz.
For Capacitive load derate current by 20%.

Parameter	Symbol	DF005	DF01	DF02	DF04	DF06	DF08	DF10	unit
Maximum repetitive peak reverse voltage	VRRM	50	100	200	400	600	800	1000	V
Maximum RMS bridge input voltage	VRMS	35	70	140	280	420	560	700	V
Maximum DC blocking voltage	VDC	50	100	200	400	600	800	1000	V
Maximum average forward rectified output current at TA=40°C	IF(AV)	1.0							A
Peak forward surge current single sine-wave superimposed on rated load (JEDEC Method)	IFSM	50							A
Rating for fusing (t<8.3ms)	I^2t	10							A^2sec
Typical thermal resistance per element (1)	ReJA	110							°C / W
Typical junction capacitance per element (2)	Cj	25.0							pF
Operating junction and storage temperature range	TJ, TSTG	-55 to + 150							°C

Electrical Characteristics

Rating at 25°C ambient temperature unless otherwise specified. Resistive or Inductive load, 60Hz.
For Capacitive load derate by 20 %.

Parameter	Symbol	DF005	DF01	DF02	DF04	DF06	DF08	DF10	Unit
Maximum instantaneous forward voltage drop per leg at 1.0A	VF	1.1							V
Maximum DC reverse current at rated DC blocking voltage per element TA =25°C TA =125°C	IR	10 500							μA

Notes: (1)Thermal resistance from Junction to Ambemt on P.C.board mounting.
(2)Measured at 2.0MHz and applied reverse voltage of 4.0 volts.

SEMIC TRADE

Semic Trade, s.r.o., Volutová 2521/18, 158 00 Praha 5
Telephone: +420 251 625 331, 251 625 332, 251 625 377
GSM: +420 605 999 994 Fax:+420 251 626 252, 251 626 393

www.semic.cz
semic@semic.cz

Rating and Characteristic Curves (T_A=25°C Unless otherwise noted)
DF005 thru DF10

Fig. 1 Derating Curve for Output Rectified Current

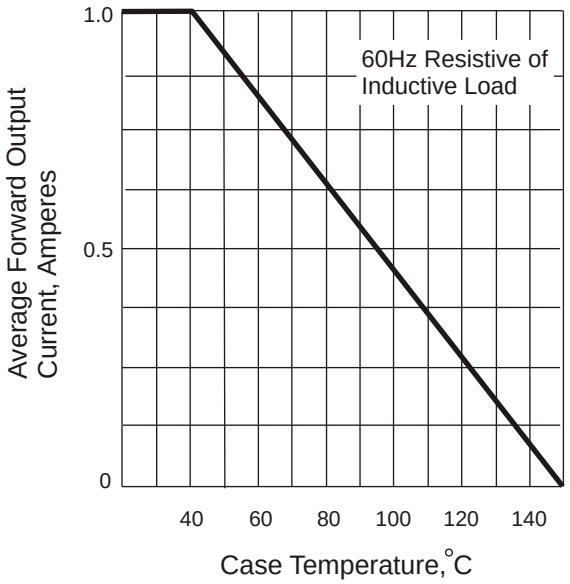

Fig. 2 Maximum Non-repetitive Peak Forward Surge Current

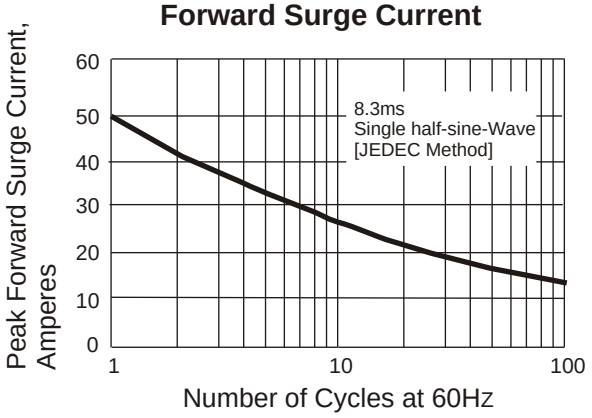

Fig. 3 Typical Instantaneous Forward Characteristics

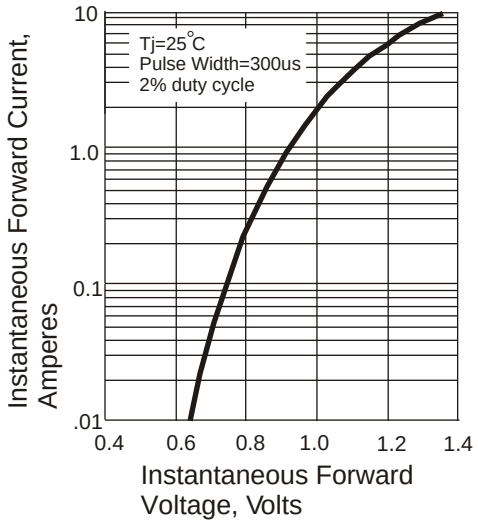

Fig. 4 Typical Revers Characteristics

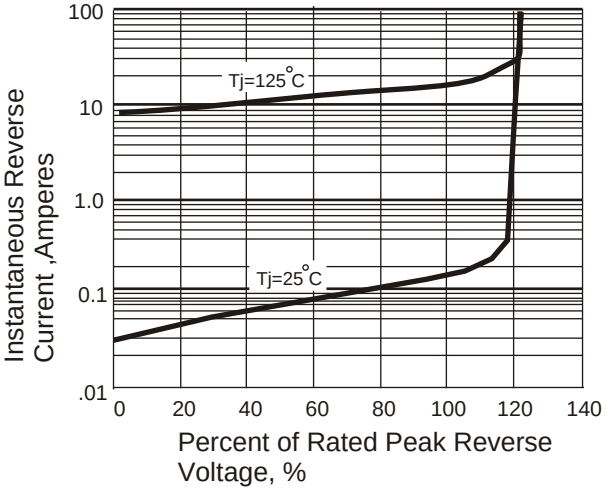

Fig. 5 Typical Junction Capacitance

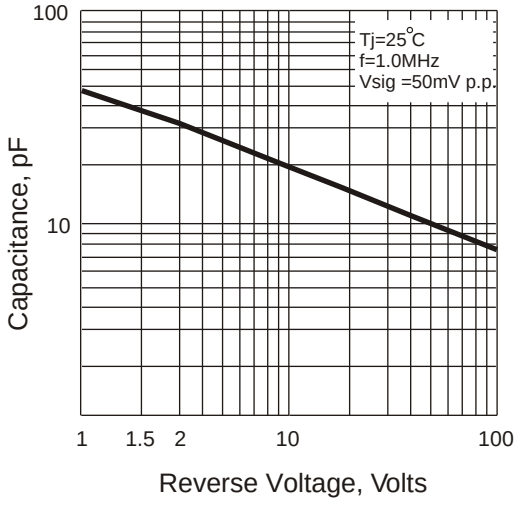

SEMIC TRADE

Semic Trade, s.r.o., Volutová 2521/18, 158 00 Praha 5
Telephone: +420 251 625 331, 251 625 332, 251 625 377
GSM: +420 605 999 994 Fax:+420 251 626 252, 251 626 393

www.semic.cz
semic@semic.cz